P33-2

Image for illustration purposes only.

Generating Set Model	Prime*	Standby*
380-415V,50Hz	30.0 kVA / 24.0 kW	33.0 kVA / 26.4 kW
	- / -	- / -

Ratings at 0.8 power factor.

Prime Rating
These ratings are applicable for supplying continuous electrical power (at variable load) in lieu of commercially purchased power. There is no limitation to the annual hours of operation and this model can supply 10% overload power for 1 hour in 12 hours.

Standby Rating
These ratings are applicable for supplying continuous electrical power (at variable load) in the event of a utility power failure. No overload is permitted on these ratings. The alternator on this model is peak continuous rated (as defined in ISO 8528-3).

Standard Reference Conditions
Note: Standard reference conditions 25°C (77°F) Air Inlet Temp, 100m (328 ft) A.S.L. 30% relative humidity.
Fuel consumption data at full load with diesel fuel with specific gravity of 0.85 and conforming to BS2869: 1998, Class A2.

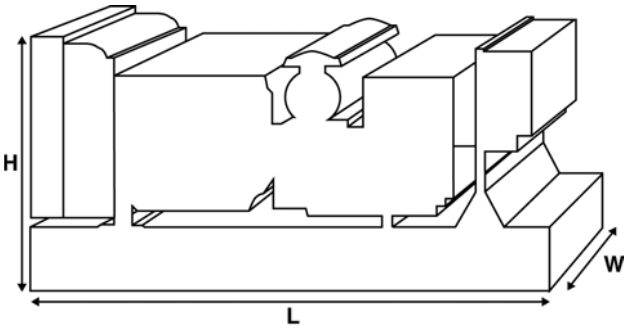

Ratings and Performance Data

Engine Make & Model:		Perkins 1103C-33G2/3	
Alternator manufactured for FG Wilson by:		Leroy Somer	
Alternator Model:		LL1014S	
Control Panel:		1002T	
Base Frame:		Fbc2 - (08Hr)	
Circuit Breaker Type:		3 Pole MCCB	
Frequency:		**50 Hz**	**60 Hz**
Engine Speed: RPM		1500	-
Fuel Tank Capacity: litres (US gal)		161 (42.5)	
Fuel Consumption: l/hr (US gal/hr)			
(100% Load)	**Prime**	7.8 (2.1)	-
	Standby	8.5 (2.2)	-

Available Options

- CE Certification
- Sound Attenuated EC Enclosures
- Control Panel Upgrades
- Range of Silencers
- Range of Alarms and Shutdowns

Dimensions and Weights

Length (L) mm (in)	**Width** (W) mm (in)	**Height** (H) mm (in)	**Dry** kg (lb)	**Wet** kg (lb)
1540 (60.6)	970 (38.2)	1361 (53.6)	827 (1823)	840 (1852)

Dry = With Lube Oil Wet = With Lube Oil and Coolant

Ratings in accordance with ISO 8528, ISO 3046, IEC 60034, BS5000 and NEMA MG-1/22.
Generating set pictured may include optional accessories.

Engine Technical Data	
No. of Cylinders / Alignment:	3 / In Line
Cycle:	4 Stroke
Bore / Stroke: mm (in)	105.0 (4.1)/127.0 (5.0)
Induction:	Naturally Aspirated
Cooling Method:	Water
Governing Type:	Mechanical
Governing Class:	ISO 8528 G2
Compression Ratio:	19.25:1
Displacement: l (cu. in)	3.3 (201.4)
Moment of Inertia: kg m2 (lb/in2)	1.14 (3896)
Engine Electrical System:	
- Voltage / Ground	12/Negative
- Battery Charger Amps	65
Weight: kg (lb) - Dry	412 (908)
- Wet	430 (948)

Performance	50 Hz	60 Hz
Engine Speed: rpm	1500	-
Gross Engine Power: kW (hp)		
- Prime	27.9 (37.0)	-
- Standby	31.0 (42.0)	-
BMEP: kPa (psi)		
- Prime	676.0 (98.1)	-
- Standby	752.0 (109.0)	-

Fuel System	
Fuel Filter Type:	Replaceable Element
Recommended Fuel:	Class A2 Diesel

Fuel Consumption: l/hr (US gal/hr)

Prime	110% Load	100% Load	75% Load	50% Load
50 Hz	8.5 (2.2)	7.8 (2.1)	6.0 (1.6)	4.2 (1.1)
60 Hz	-	-	-	-

Standby	110% Load	100% Load	75% Load	50% Load
50 Hz		8.5 (2.2)	6.5 (1.7)	4.6 (1.2)
60 Hz		-	-	-

(Based on diesel fuel with a specific gravity of 0.84 and conforming to BS2869, Class A2)

Air Systems	50 Hz	60 Hz
Air Filter Type:	Replaceable Element	
Combustion Air Flow: m3/min (cfm)		
- Prime	2.2 (76)	-
- Standby	2.1 (75)	-
Max. Combustion Air Intate Restriction: kPa (in H_2O)	3.0 (12.0)	-

Cooling System	50 Hz	60 Hz
Cooling System Capacity: l (US gal)	10.2 (2.7)	-
Water Pump Type:	Centrifugal	
Heat Rejected to Water & Lube Oil:		
kW (Btu/min) - Prime	18.5 (1052)	-
- Standby	20.3 (1154)	-
Heat Radiation to Room: Heat radiated from engine and alternator		
kW (Btu/min) - Prime	5.4 (307)	-
- Standby	5.9 (336)	-
Radiator Fan Load: kW (hp)	0.3 (0.4)	-
Radiator Cooling Airflow: m3/min (cfm)	62.6 (2211)	-
External Restriction to Cooling Airflow: Pa (in H_2O)	125 (0.5)	-

Cooling system designed to operate in ambient conditions up to 50°C (122°F). Contact your local FG Wilson Dealer for power ratings at specific site conditions.

Lubrication System	
Oil Filter Type:	Spin-On, Full Flow
Total Oil Capacity: l (US gal)	8.3 (2.2)
Oil Pan: l (US gal)	7.8 (2.1)
Oil Type:	API CG4 / CH4 15W-40
Oil Cooling Method:	Water

Exhaust System	50 Hz	60 Hz
Silencer Type:	Industrial	
Silencer Model & Quantity:	SD50 (1)	
Pressure Drop Across Silencer System: kPa (in Hg)	0.14 (0.041)	-
Silencer Noise Reduction Level: dB	20	-
Maximum Allowable Back Pressure: kPa (in Hg)	12.0 (3.5)	-
Exhaust Gas Flow: m3/min (cfm)		
- Prime	5.5 (194)	-
- Standby	5.3 (185)	-
Exhaust Gas Temperature: °C (°F)		
- Prime	515 (959)	-
- Standby	570 (1058)	-

Alternator Physical Data	
Manufactured for FG Wilson by:	Leroy Somer
Model:	LL1014S
No. of Bearings:	1
Insulation Class:	H
Winding Pitch Code:	2/3 - 6
Wires:	12
Ingress Protection Rating:	IP23
Excitation System:	SHUNT
AVR Model:	R250

Alternator Operating Data	
Overspeed: rpm	2250
Voltage Reguation: (Steady state)	+/- 0.5
Wave Form NEMA = TIF:	50
Wave Form IEC = THF:	2.0%
Total Harmonic content LL/LN:	4.0%
Radio Interference:	Suppression is in line with European Standard EN61000-6
Radiant Heat: kW (Btu/min)	
- 50 Hz	3.3 (188)
- 60 Hz	-

Alternator Performance Data:	50 Hz			60 Hz		
Data Item	415/240V	400/230V	380/220V			
Motor Starting Capability* kVA	64	60	55			
Short Circuit Capacity** %	300	300	300			
Reactances: Per Unit						
Xd	1.970	2.120	2.350			
X'd	0.100	0.110	0.120			
X"d	0.052	0.056	0.062			

Reactances shown are applicable to prime ratings.
*Based on 30% voltage dip at 0.6 power factor.
**With optional permanent magnet generator or SHUNT excitation.

Voltage Technical Data 50 Hz				
Voltage	Prime:		Standby:	
	kVA	kW	kVA	kW
415/240V	30.0	24.0	33.0	26.4
400/230V	30.0	24.0	33.0	26.4
380/220V	30.0	24.0	33.0	26.4

Voltage Technical Data 60 Hz				
Voltage	Prime:		Standby:	
	kVA	kW	kVA	kW

General Information

Documentation

A full set of operation and maintenance manuals and circuit wiring diagrams.

Generating Set Standards

The equipment meets the following standards: BS5000, ISO 8528, ISO 3046, IEC 60034, NEMA MG-1.22.

FG Wilson is a fully accredited ISO 9001 company.

EU Stage II Emissions Compliant.

Warranty

All prime equipment carries a one year manufacturer's warranty. Standby equipment, limited to 500 running hours per year, has a two year manufacturer's warranty. For details on warranty cover please contact your local Dealer, or visit our website: FGWilson.com.

Dealer contact details:

Advanced Diesel Engineering LTD
14 Langthwaite Business Park, South Kirkby, Pontefract, WF9 3AP
Telephone: +44 (0) 1977 658 100 | Fax: +44 (0) 1977 608 111
Email: enquiries@adeltd.co.uk | Web: www.adeltd.co.uk